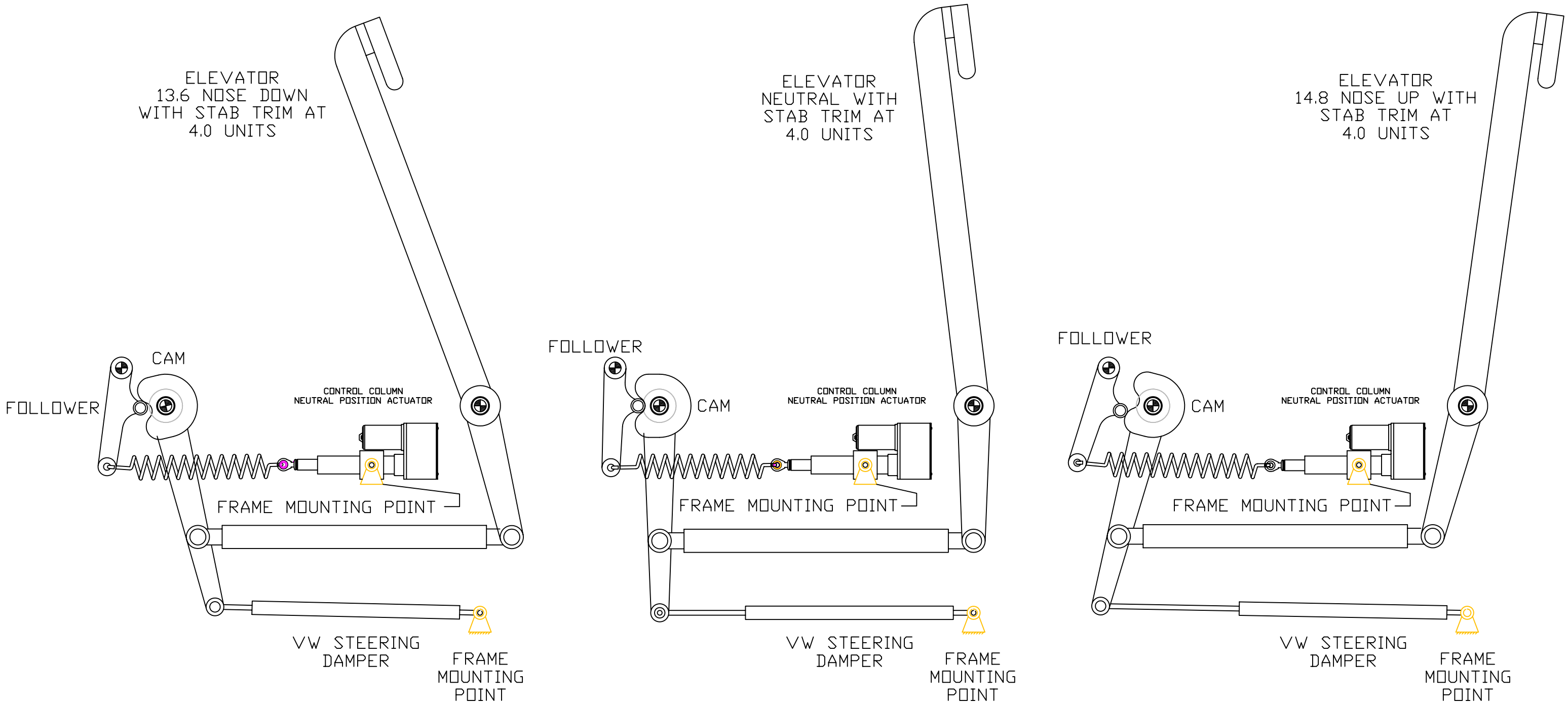737 CAM & FOLLOWER FEEL SYSTEM
LINEAR ACTUATOR RETRACTED FOR INCREASED CENTERING PRESSURE